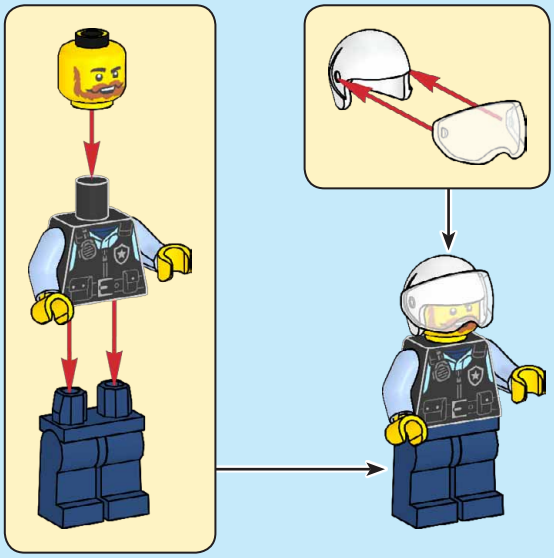

1

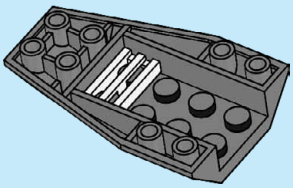

2

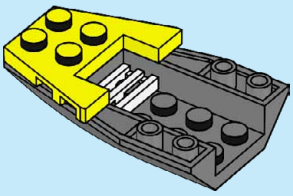

3

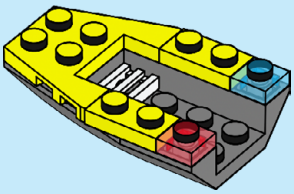

4

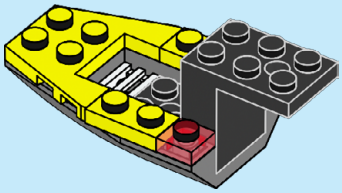

5

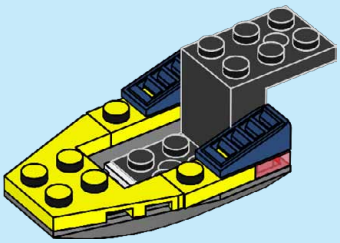

6

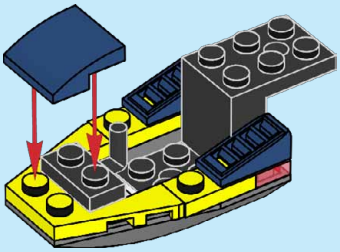

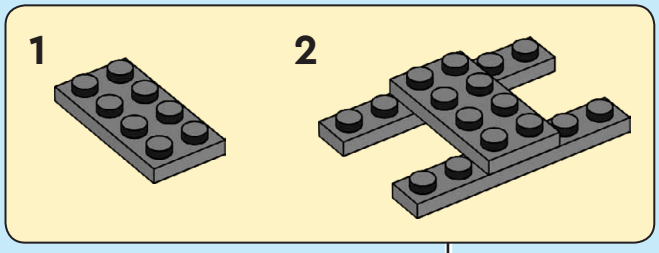

7

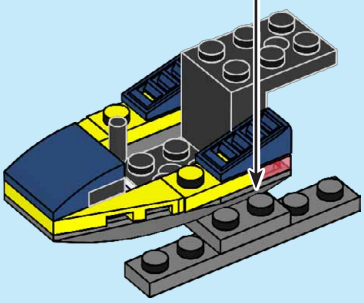

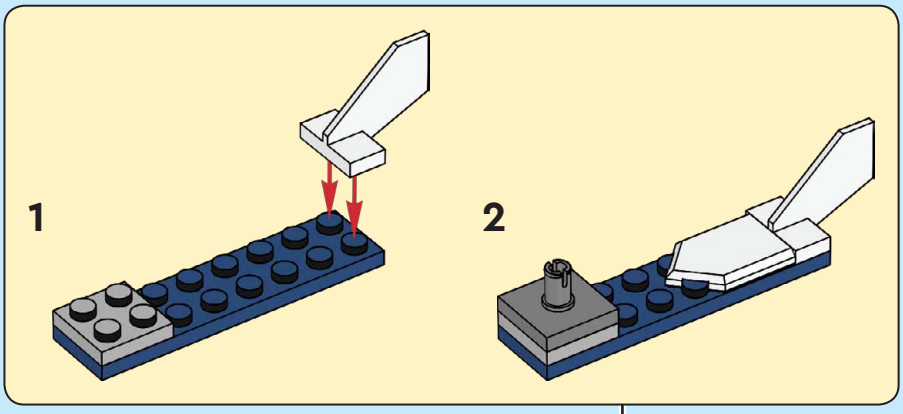

8

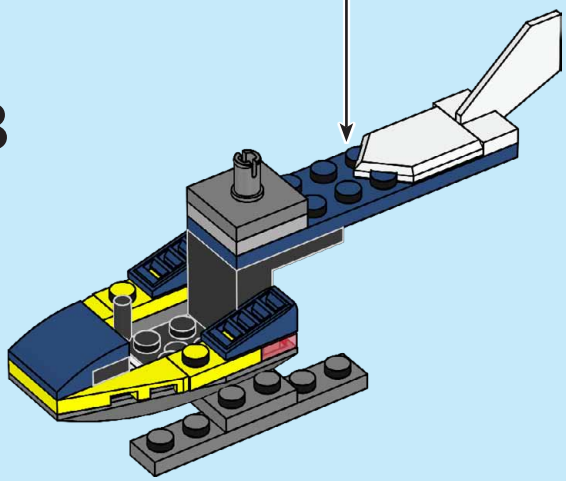

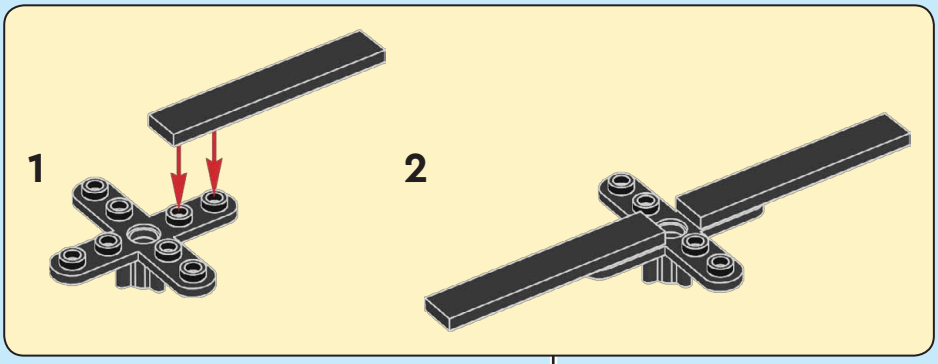

9

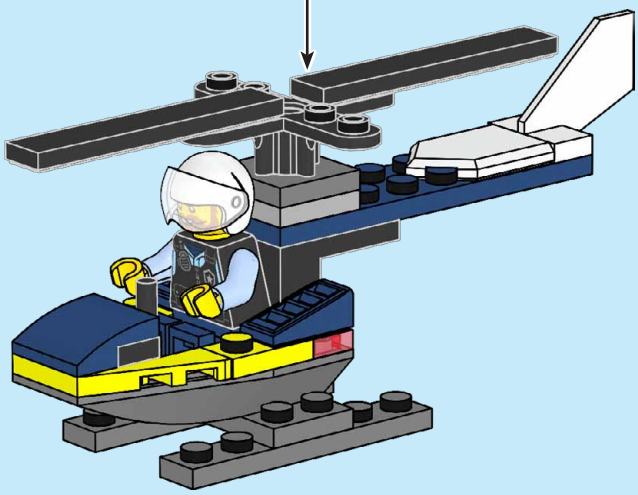

LEGO, the LEGO logo, the Brick and Knob configurations and the Minifigure are trademarks of the LEGO Group. ©2024 The LEGO Group. Manufactured by Blue Ocean Entertainment AG, Seidenstraße 19, 70174 Stuttgart, Germany, under license from the LEGO Group.